VEX Robotics Parts Identification

Study online at quizlet.com/_lyb4s5

1. **angle structure - structure system**

An "L" shaped structure part used to form the "skeleton" of the robot.

2. **axle - motion subsystem**

A long, rigid piece through the rotational center of an object (like a gear or wheel). Square bars are usually used as axles in the VEX system.

3. **Battery 7.2V 2000mAh**

Battery pack that provides 7.2 volts of electricity for the power system at 2000 milliamps.

4. **battery 7.2V 3000mAh**

Battery pack that provides 7.2 volts of electricity for the power system a 3000 milliamps.

5. **bearing (flat) - motion subsystem**

A commonly used type of bearing in the VEX system. This bearing has three holes in a row. An axle is passed through the center hole which allows it to spin freely.

6. **bearing (pillow block) - structure subsystem**

A piece that is used to hold a moving piece (such as an axle) in place relative to the rest of the system.

7. **bearing pop-rivet - structure system**

A plastic fashtener system consisting of two parts and used to hold the VEX bearing Flat part in place on the structure system.

8. **bumper switch sensor - sensor subsystem**

A high-durability sensor designed to detect physical contact. This is a digital sensor.

9. **caster wheel - motion subsystem**

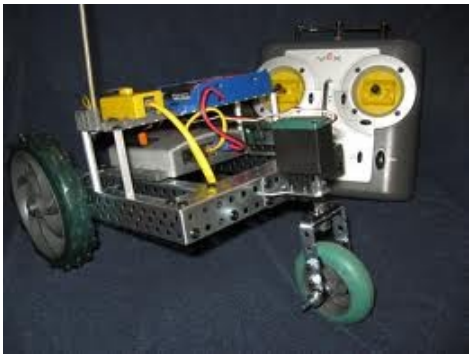

A free-swiveling wheel mounted on a robot to provide stability while producing a minimum of friction.

10. **c-channel - structure system**

A structure system beam used to form the "skeleton" of the robot.

11. **chain and sprocket - motion subsystem**

Optional parts to provide a chain drive in the motion system of the robot.

12. **chassis rail - structure system**

A structure system beam used to form the "skeleton" of the robot.

13. **chassis - structure subsystem, motion subsystem**

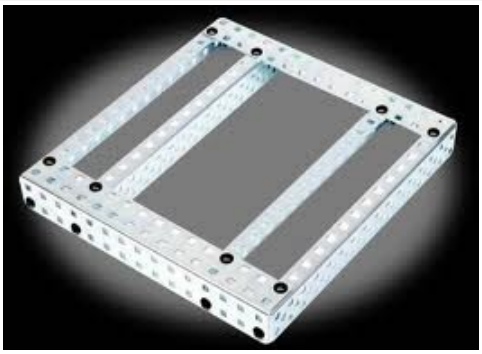

A vehicle's basic structural frame, plus its locomotion systems.

14. **clutch - motion subsystem**

A detachable piece normally mounted to the VEX motors that protects them from shock loads.

15. **collar - structure subsystem**

A type of spacer that can be set to remain stationary at any given point along an axle.

16. **drive train - motion system**

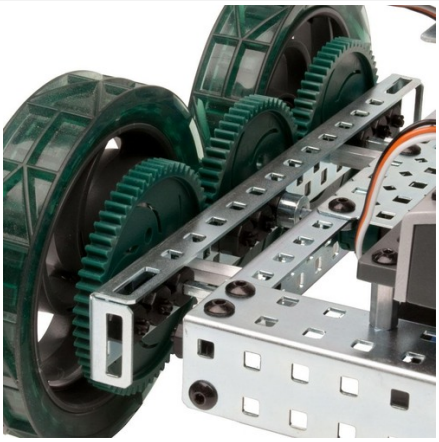

All the parts involved in the primary locomotion system of a robot, including the motors, gears, axles, and wheels.

17. **fastener - structure subsystem**

Screws, nuts, and washers in various diameters and lengths for connecting structure and attachment parts to the robot.

18. **fastener - structure subsystem**

A general term for pieces (such as screws) whose primary purpose is to hold two or more components together.

19. **flexible structure - structure system**

A flexible structure part used to form the "skeleton" of the robot or specialized applications.

20. **gear - motion subsystem**

Spinning discs with teeth that prevent them from slipping past each other. Gears are frequently used to transfer rotational motion from one piece to another, and to provide mechanical advantage while doing so.

21. **gear train - motion subsystem**

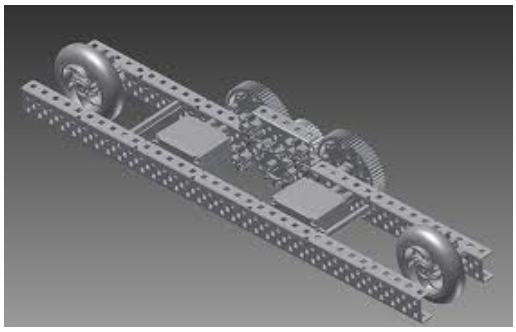

A group of gears that turn together to transmit motion from one point to another on the robot, often providing mechanical advantage along the way.

22. **gripper (claw kit) -**

An attachment designed to pick up or hold an object, often by "gripping" it with claw-like appendages.

23. **gusset - structure subsystem**

A piece used to strengthen an angled joint.

24. **hex L wrench**

An L-shaped tool used to work with hex screws.

25. **idler gear - motion subsystem**

A gear in the gear train that is neither the driven not the driving gear, and does not share an axle with another gear in the train.

26. **jumper - control subsystem, logic subsystem**

A metal wire contained in a plastic housing that can be placed (and removed) by hand to complete (make) an electrical connection.

27. **KEPS Nut - structure subsystem**

A standard nut that includes a toothed "crown" designed to bite into a mounting surface and prevent the nut from slipping.

28. **lever - structure system**

One of six "simple machines" that provides a mechanical advantage. There are three main classes of levers with subtle differences, but in general, they are long pieces that rotate around any point on their length.

29. **limit switch sensor - sensor subsystem**

A small contact-sensitive sensor that is most often used for internal regulation of movement. This is a digital sensor.

30. **microcontroller back up battery holder - power subsystem**

Battery holder for a 9 volt battery that supplies back up power to the microcontroller.

31. **microcontroller battery holder - power subsystem**

The battery container for the microcontroller. The battery holder contains the 8 NiCd AA batteries required to operate the transmitter.

32. **microcontroller - logic subsystem**

The "brain" of the robot. The microcontroller contains the robot's program and processes all signals received from both human operators and on board sensor systems. It also manages power allocation on board the robot and directly controls the motors.

33. **motor controller connection - motion subsystem**

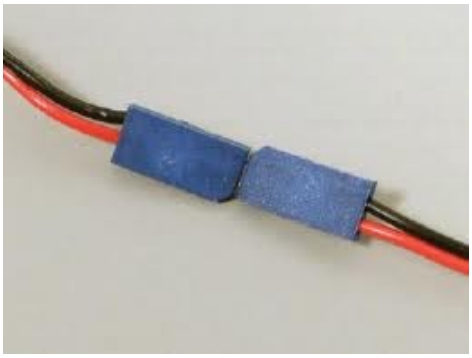

Electrical connection between the motor and the microcontroller providing control of the direction in which the motor turns.

34. **motor controller - motion subsystem**

Electrical part that is connected between the motor and the microcontroller and provides control over the motors operation.

35. **motor (electric) 2-wire - motion subsystem**

An electromechanical device that converts electrical energy into kinetic (physical) energy on demand.

36. **parts container**

Plastic parts storage container used to keep robot parts separated and ready for use.

37. **plate structure - structure system**

A flat structural part used to provide a mounting surface for other robot parts.

38. **potentiometer - sensor subsystem**

An analog sensor which measures angular position.

39. **rechargeable battery**

Batteries that can be discharged and recharged for continued use.

40. **screw, hex - structure subsystem**

A screw with a hexagon-shaped hole in the head, allowing the screw to be tightened or loosened with a hex L wrench.

41. **servomotor (3-wire) - motion subsystem**

An electromechanical device that converts electrical energy into kinetic (physical) energy on demand. The difference between a standard motor and a servomotor is the way they respond to joystick commands.

42. **shaft coupler - motion subsystem**

A motor system part used in between the motor the drive shaft.

43. **smart charger - power system**

A battery charge capable of charging all of the VEX battery packs.

44. **spacer - structure subsystem, motion subsystem**

Plastic spacers which are designed to slide onto square bar axles between other parts (or between parts and rails) to keep them from moving too close together.

45. **SPST switch - sensor subsystem**

"Single pole, single throw" switch that is activated by a single contact (single pole) and changes the state of a single output (single throw). The bumper switch sensor is an SPST switch.

46. **structure parts - structure system**

Structural parts used to construct the chassis, levers, and sub systems.

47. **tank track kit -**

Optional parts kit to provide tank track motion on th robot.

48. **tether - control subsystem**

A cable used to connect the Transmitter directly to th Microcontroller.

49. **threaded - structure subsystem**

A threaded piece that has threading on it or in it, which allows a screw to be fastened into it.

50. **tool kit**

Tools used to assemble the robot, includes two aller wrenches and a wrench.

51. **transmitter (VEXnet Joystick) - control subsystem**

The primary user interface device for the human operator of the robot. The transmitter gathers input from its two joysticks and four buttons, and transmits them via FM radio wave to the RF receiver mounted on the robot.

52. **trickle charger - power subsystem**

A very low-power charger that is used to keep batteries fully charged.

53. **VEX Cortex Bundle System - logic system**

The complete logic and control system of the VEX Robot including the VEXnet Joystick, VEXnet Microcontroller, and VEXnet USB adapter key.

54. **VEX Educational Guide**

Educational information to help the student understand how the robot works.

55. **VEX Protobot Robot**

One of two robots that can be built with the VEX Robot Starter bundle kit.

56. **VEX Tumbler Robot**

One of two robots that can be built with the VEX Robot Starter Bundle kit.

57. **VEX USB adapter key - logic system**

The VEXnet 802.11g key provides communication between the VEX Cortex Microcontroller and the VEXnet Joystick.

58. **wheel - motion subsystem**

Wheels of different diameters and tread type for providing motion or a specific task on the robot.

59. **worm gear - motion subsystem**

An optional gear part used to provide advanced gear applications.

60. **zip-tie -**

A plastic tie for securing wires or other parts to the robot.